Separable connectors & bushings - Interface C

400AR-4 - Interface C - Equipment bushing

Nexans Ref.: 400AR-4

CONTACT

Sales EUROMOLD
sales.euromold@nexans.com

Up to 36 kV - 1250 A
EUROMOLD Equipment bushing

STANDARDS

Product CENELEC EN 50180

International IEC 60137

APPLICATION

For use in equipment insulated with oil fluid, typically for transformers, switchgear, capacitors...

TECHNICAL CHARACTERISTICS

Each bushing is tested for AC withstand and partial discharge prior to leaving the factory.

CHARACTERISTICS

Construction characteristics	
Connector shape	Bushing
Connector type	Male
Conductor material	Copper
Technology	Slip-0n
Dimensional characteristics	
Conductor cross-section, range	0 ... 0 mm²
Electrical characteristics	
Rated Voltage Uo/U (Um)	19 / 33 (36) kV
Maximal partial discharge at 2Uo	10 pC
Dielectric withstand voltage, 50Hz 1mn	85.5 kV
Impulse voltage	194 kV
Usage characteristics	
Interface	C (630 - 1250 A)

Connector shape
Bushing

Rated Voltage Uo/U (Um)
19 / 33 (36) kV

Interface
C (630 - 1250 A)

All drawings, designs, specifications, plans and particulars of weights, size and dimensions contained in the technical or commercial documentation of Nexans is indicative only and shall not be binding on Nexans or be treated as constituting a representation on the part of Nexans.

DESIGN

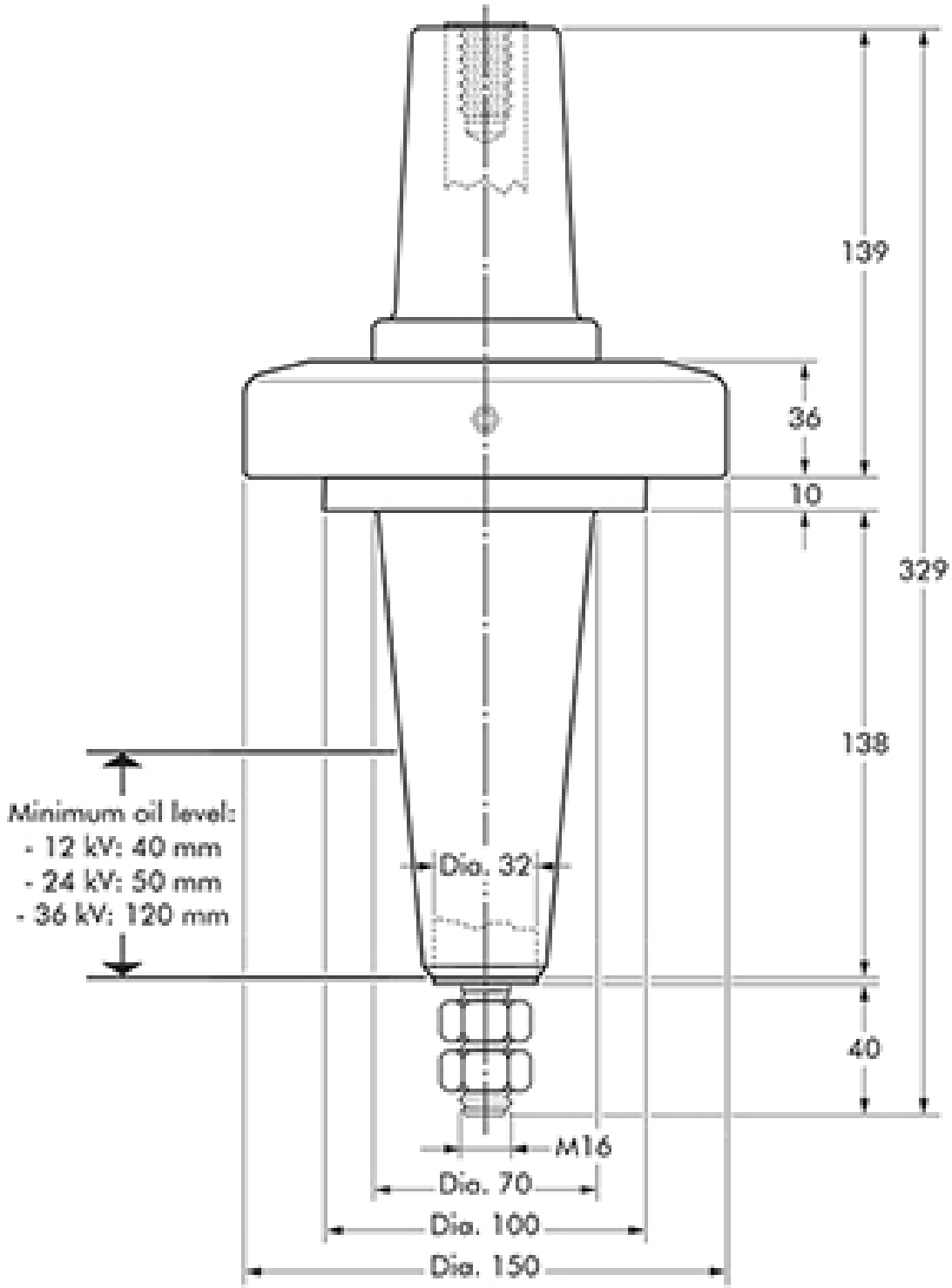

Connector shape	Rated Voltage Uo/U (Um)	Interface
Bushing	**19 / 33 (36) kV**	**C (630 - 1250 A)**

All drawings, designs, specifications, plans and particulars of weights, size and dimensions contained in the technical or commercial documentation of Nexans is indicative only and shall not be binding on Nexans or be treated as constituting a representation on the part of Nexans.